Railvolution

The Professional Two-Monthly Magazine Of Rail Transport Worldwide

Volume 13

No. 1/13

€ 10.00

A Visit To Newag
Granit Locomotives
InnoTrans Megareport III
Stadler's 1,520mm-Gauge Designs
Eversholt's Proposal For ECML Trains

Railvolution No 1 In Europe

9 771212 185007 01

An Introduction To Active Fire Protection Systems For Rolling Stock

Fire detection and fire fighting systems for on-board application are increasing in importance and requirements for the European and International markets. Is the railway industry ready for this challenge?

Active fire protection of passenger trains is certainly a very relevant subject nowadays. Beside passive safety, improved dramatically in last decades and resulting in the recently released EN 45545, also active fire detection and fighting are always more and more daily business of train designers, manufacturers, consultants, notification bodies and safety authorities.

Fire detection is often **mandatory**, according to TSI, as example, or to some national standards. In several countries fire fighting as well is a requirement for acceptance and homologation of the vehicle for the national network. It could be mandatory only for machinery spaces with combustion engines, like in Great Britain, or in the whole passenger area, like in Italy. While not mandatory, often a fire detection and fighting system is integrated in the main fire safety concept of the vehicle, giving then to the manufacturer the best advantages in terms of design and construction.

An early fire detection and effective fire fighting are of the greatest importance to modern rolling stock industry. A fire detection and fighting system must also be suitable for the **train application**: robust to electromagnetic disturbings, shocks and vibrations, possibly not too heavy and difficult to integrate, economic in first equipment price and even more in the life cycle costs, and beside all of that, must ensure the best safety for passengers and the best protection of the vehicle.

The first fire detection and fighting systems conceived as integrated systems in the architecture of the train and developed according to railway standards date back to beginning of decade 2000s. In this market FOGTEC has been pioneer. Now, after almost 15 years of **development**, modern active fire detection and fire fighting systems became more reliable, technologically more advanced and more easily maintainable. But what is the actual state of the art at nowadays, which technologies are used, which kind of systems are successfully working in the trains produced in Europe?

Photo: Alessandro Albé

The Alstom's AGV was the first train homologated both according to TSI High Speed and the Italian law. This photo shows unit 06 at Milano Porta Garibaldi on 27 March 2012.

Systems For Passenger Areas

An early detection of fire plays a key role in safety of human lives and preservation of the goods by fire hazards. **Smoke detection** is the safest way for fire detection in passenger areas, because detection of smoke plays an important role in the life safety of occupants. In fact, smoke is in most cases the fastest product of fire which can be detected, even quicker than temperature. Smoke is also extremely dangerous as it strongly reduces the self-rescuing ability of people, by limiting their mobility via intoxication, asphyxiation and decreased seeing. Moreover, while a human can withstand a high temperature for a given time and still being able of self-rescuing, the time a human can withstand toxic gases without losing his mobility and consciousness is much shorter. Therefore quick detection based on smoke is the most suitable way to ensure passenger's safety.

In passenger areas the commonly used technology for fire detection is smoke detection, either point smoke detectors or smoke aspiration systems. Smoke detection is in both solutions based on an **optical analysis of the air**: when smoke gets inside the measuring chamber, the light emitted by a diode (which in normal conditions is dispersed in the measurement chamber) is reflected and scattered and hits the receiver photosensitive sensor. The signal taken from the photoelectric receiver is evaluated by the software in the motherboard of the detector, which decides to define or not an alarm situation. The working principle is clarified in the right-hand picture. Some high-end series smoke detectors are also able via local or central software to evaluate the pollution level together with the velocity of increasing of the smoke, or correlating the smoke value with the time to calculate the speed of increase of smoke.

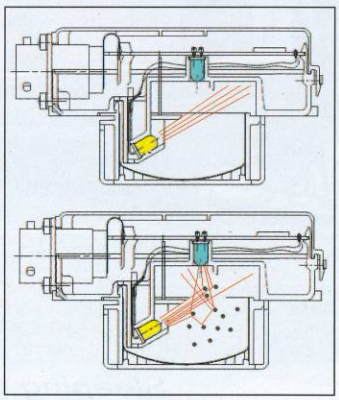

Working principle of a smoke detector. If smoke particles are moving inside the measuring chamber, the light signal hits the receiver diode and is being analysed.

In point detection systems the analysis of the presence of smoke is done punctually at each detector. Smoke aspiration systems work differently by using a centralised detector. The air coming from the passenger areas is aspirated by a fan through an **aspiration channel**. The aspiration channels consist in a certain number of plastic piping running through the areas to protect. Along this piping a number of sampling points is positioned, where air can go inside, inspired by the depression created by the central fan. The air is therefore dragged by the flow up to the central detection unit, where the smoke is detected in a similar way as traditional optical point smoke detectors. Also in that case, depending on type of central unit, a less or more sophisticated software analysis is carried out to define the alarms.

Fire detection systems play a fundamental role, as the effectiveness of the complete fire protection systems depends on their good working performances. Good working **performance** for fire detection systems can be described by the following features:

High pressure water mist nozzles and smoke detectors installed on the ceiling of a railway vehicle, in this photo in detail of a tram: a technology more and more in use.

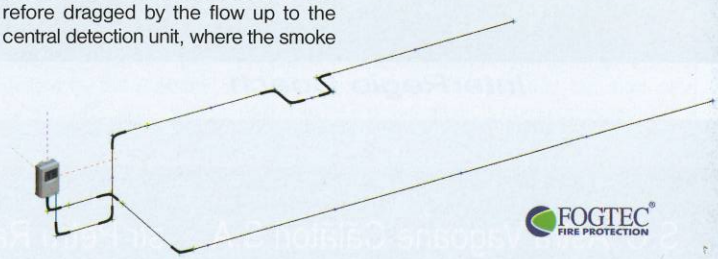

CAD software can help the moing of the piping of a smoke aspiration system and the related fluid-dynamics calculations.

Verification of the smoke detection system functionality by smoke tests. According to ARGE design guidelines a detection within maximum 1 minute must be ensured.

How actually high pressure water mist looks like, when released by a real system in a real train? This photo shows a release test carried out on a light rail vehicle.

- quick detection, normally according to the regulations used for validation,
- sectional detection, to identify as much possible in detail the location of the fire event,
- robust design in regarding of factors that could cause a false fire alarm,
- low need of maintenance and competitive RAM and LCC values in general, according to train design targets,
- right and adequate interface standards with train management systems, to exchange necessary information.

Right positioning of smoke detectors or sampling points is fundamental in the design of smoke detection systems, as a suitable design strongly belongs to the effectiveness of the system detecting fires. **Positioning of smoke detectors**/sampling points in rolling stock applications is based regarding the following aspects:

- ambient volume to protect,
- geometry of the volume to protect air conditioning concept,
- presence of specific sources of air movement as windows that can be opened,
- presence of doors (and normally open or close?) or hidden spaces where a fire can start (e. g. luggage rack with closed deck and lateral panels).

The positioning must consider as well the different operational status of the vehicle. Do are there doors, dividing e. g. staff area and passenger saloon? Are such doors normally closed of open? Recirculation and HVAC can cause situations where the smoke is dragged far from a detector or from a sampling point even if the fire is very close, or hidden spaces where smoke can accumulate. **HVAC** systems have also a strong impact on the temperature of the smokes and subsequently on their behavious. The analysis of such factors can therefore give answers completely different and more reliable comparing with a rough estimation based only on the traditional approach of building industry based on the volumes.

Finally, an adequate approach to smoke detectors' and sampling points' safe positioning can't be free of a real scale, real conditions evaluation of the effectiveness. That's the approach followed by the ARGE guidelines for fire detection in rolling stock applications, where a real scale smoke test is considered necessary to certify the layout of the smoke detection system, carrying on smoke tests in different conditions, especially in the potential worst-case, e. g. with a maximum power in HVAC or open windows with train running.

Smoke detection must be not confused with toxic gases detection. Toxic gases are also produced together with smoke in the very early phase of any fire, but toxic gases detection technology is actually not used in passenger areas. **Toxic gases detection** brings in fact the problem of „what" must be detected: in a passenger area the variety of possible fire sources is very wide as the main danger is due to what people may bring on board. Gas detectors should therefore be able to detect a large variety of gases, and this makes the solution at industrial level extremely sophisticated and practically not suitable for an application on a train where reliability, simplicity and robustness are the most important factors. Gas detection has been evaluated also for detection in technical areas, but also here the higher reliability and commercial competitiveness of temperature sensors put the gas sensor solution in a large scale application in standby.

The smoke detection system is then in passenger areas combined with **water mist** fire fighting systems. The most common solution for water mist systems is the high pressure technology. Only water can be used: other extinguishing agents (gases or aerosols) are hazardous for people's safety.

High pressure water mist systems are systems where the working pressure at nozzle level is about 80 - 200 bar. The reasons of the success of the solution high pressure water mist deluge system instead of others can be identified in:

- The use of high pressure water mist makes the complete system layout much simpler, with advantages in design, architecture and weight.
- The use of high pressure allows smaller piping for the water.
- The „low pressure" water mist systems have in any case a high pressure nitrogen cylinder, so the same precaution must be taken in its integration.
- Water mist systems based on temperature detectors, typically thermosensitive glass bulbs, expose the system to the risk of delayed activation in case of fire with low thermal emission, with clear risks for safety of passengers.

How do those systems look like? In general, a high pressure **water mist system consists** of:

- a tank, for storing the water and the propellant fluid (typically nitrogen at 200 bar) necessary for pressurising the water and create the water mist,
- the water distribution system, consisting in piping, section valves, flexible hoses, connections etc.,
- the nozzles to create the water mist: in fact, the water mist is created only at nozzle's level.

By a basic functional point of view, when the fire is detected by the smoke detection system, the fire suppression system moves the section valves in the way to create the right path for the water flow, then the nitrogen cylinder is opened by a special activation valve and the gas flows inside the water cylinder, pushing out the water from inside up to nozzles. The water flow can be shunted in different lines by using section valves, often electrical driven.

Main features which made water mist the most widespread and appreciated solution for fire fighting systems for passenger areas can be resumed as:

- absolute environmentally friendly and compatible with a presence of passengers,
- strongly limited side effects and damages to the surrounding equipment,
- highest cooling effect of any other extinguishing agent,
- effectiveness in absorption and dragging down of the smoke, limiting the lack of visibility,
- no restriction in use and transport, differently from e. g. chemical gases banned or subjected to gradual banning in a lot of countries.

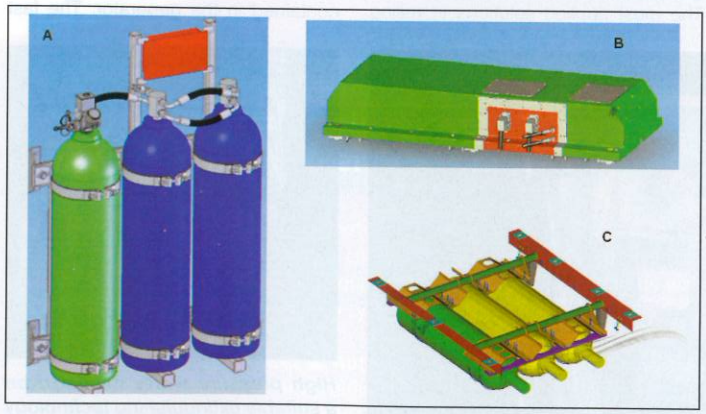

The cylinders of the water mist systems are often realised as complete modules: A) standing; B) laying on the roof with covers; C) hung underneath the bodyshell, without covers.

Systems For Technical Areas

In technical areas the presence of smoke is not necessarily related to presence of fire. Smoke detection could therefore be not the optimal solution. Passengers are not attending, so smoke does not consist in an immediate danger, passengers' lives protection is not the first safety objective, therefore detection by considering temperature as criterion is the method to choose. The **main technologies** used for temperature detection are:

- linear heat sensitive electrical detectors,
- point temperature detectors,

LHD cable and a high pressure water mist nozzle installed in the engine room of a diesel locomotive.

Gas systems are a common solution for enclosed electrical cabinets like this traction converter of a high speed EMU.

- linear heat sensitive pneumatic pressurised detectors.

The latter solution was very common in the past, but showed in the last years some critical points in terms of reliability: the use of this technology is therefore less and less common and will not be described here.

Linear heat sensitive electrical detectors (normally marketed as **LHD**, linear heat detector) are typically made by using a metallic cable running all long the area to protect. The cable is protected by devoted sheaths, made in polymeric materials with different thermal sensitivity, set by the specific application. Internally, the cable is made by two or more conductor wires (in copper, aluminium or tin) which in normal conditions are electrically isolated by rubber sheaths. An interface box with a power supply applies a voltage to the cables and checks the wiring via a resistor on the opposite extremity.

If a fire will affect the protected area, the heat release will cause the thermal destruction of the protective sheaths, therefore the internal wires will be melted transferring an electrical signal (short circuit or resistance disequilibrium) to the evaluation unit. Such solution is **very simple** and easy to install and maintain, due to absence of stressed parts, and can afford high harshness conditions. The external sheath as well as the internal isolating rubber can be designed with different temperature thresholds, depending on the supposed associated fire risk. Normally the fire sensitive cable is accompanied by a protective corrugated hose to protect it from mechanical stresses. The protective hose has to be integrated in the way to disrupt at a lower temperature then the internal electric cable.

In simpler systems, the temperature detection is realized by point detectors: those are typically industrial thermocouples or thermostats or resistance thermometers.

Concerning fire fighting in technical areas, the most used solutions are nitrous gases and aerosols. **Fire fighting with gas** is a very widespread solution for enclosed technical areas like electrical cabinets. Gas systems are working on the principle of saturation of the volume: in any volume, the introduction of a certain quantity of gas will dilute the oxygen down to the minimum level necessary to allow the combustion. The main characteristics of such systems, which gave them a so wide popularity, are:

- simple design, consisting mainly only in a tank, activation device and a simple piping,
- functionality: gas fire-fighting is very effective suffocating the fire,
- absence of residuals, due to their clean agents features.

Gas systems are clearly ineffective in application in large or wide open areas, or equipment subjected to very strong air movements: in that case the gas system would be ineffective as the gas would never saturate the volume. The most applied solutions in rolling stock applications use an inert gas, like nitrogen, as gaseous fire extinguisher. Chemical gases are used too, even if some of them are step by step banned in several countries. A gas fire fighting **system consists** of:

- a tank for the extinguishing gas, normally stored at 200 - 300 bar for having enough quantity in a limited space,
- a distribution piping,
- devoted gas nozzles, to discharge the correct flow rate.

When a gas system would be ineffective due to openings or big volumes, the most suitable solution is always the use of aerosol. **Aerosols** are very fine powders fighting the fire by chemical interaction with the combustion process. Aerosols are available as pressurised cylinders (similarly to gas systems) and as self-container aerosol generators. The latter solution reflects the state of the art and gives strong advantages in terms of weight, size, reliability and simple integration.

The recent development in the market of dry agent applications, aerosol generators give great results in comparison to pressurised cylinders solutions thanks to their extreme simplicity. An **aerosol generator** consists in an atmospheric pressure container where the substances necessaries to create the aerosol are stored. When a fire is detected and the activation signal commanded by the detection system, an electrical current fires the reaction between the aerosol-forming materials contained in the generator. The fast reaction pushes out the powder and creates the aerosol solution, consisting in a combustion inhibitor material.

The use of high pressure **water mist** for technical areas in common in case of combustion engines like for diesel locomotives or DMUs with powerpacks. The water in fact, while in form of water mist, cools down the ambient very softly, without thermal schock or risk of explosion, like done by normal water. The effectiveness of the fire extinguishment is then ensured by thermal absorption and oxygen displacement.

Active Fire Protection System And Design Of The Train

Often active fire protection systems are seen as an additional problem to face during the design of the vehicle, especially if imposed by the technical requirements or by law. But if changing the point of view from the problem to the challenge, the industrial state of the art demonstrated that reliable, safe, functional and properly integrated fire detection and suppression systems already exist and reached a level of industrial maturity.

The **importance** of using a fire protection system which is designed for railway applications, together with a transversal know-how from both fire protection and railway industry, are the first requirements for a proper integration of the system in the vehicle. They are also the first steps for a successful homologation and a reliable trouble-

Release test of an aerosol generator in a mock-up of an engine room.

High pressure water mist can be a suitable extinguishing technology also for diesel engines. The photo shows a release test in an underfloor powerpack.

A clever way of active fire protection can have beneficial effects on the train architecture.

free operation during the future three-decade life of the train.

While this approach ensures already the manufacturing of a train with a high quality fire protection system on board, even wider opportunities are open to the designer who wants to explore them, and the railway industry has only to win from it. In fact, when approached in a **holistic way** starting from the very first design, active fire protection system can be a powerful opportunity for the designers and the developers of the vehicle. The smart use of active fire protection in the design and general concept of the vehicles and the infrastructure is currently a topic of extreme importance and interest. For this reason, it will be object a dedicated article in the next issues of Railvolution.

The European Regulations

The design, the validation and the homologation process of active fire protection systems in nowadays is not officially ruled neither in the form of a national standard by any European country nor by EN standards. This lack is due to the fact that the technology is relatively new, with first applications dating back to early years of 21st century.

A huge step forward and big effort to standardise design and verification procedures and homologation criteria was done starting from 2005 by a working group formed by the main European companies active in the field of fire detection and fighting systems, together with some OEMs and supervised by the TÜV Nord and TÜV Süd. This working group developed the well-known **ARGE Guidelines** (ARGE standing for Arbeitsgemeinschaft, working association). Those guidelines, issued in three parts, respectively dedicated to fire detection, fire fighting and system functionality, achieved in last years a very wide acknowledgement all around Europe as well as in the international markets. A large number of active fire protection systems in Europe and in the world are designed and homologated according to these guidelines, and more often operators, safety authorities, consultants and notification bodies and train manufacturers are asking, suggesting or even requiring this design guidelines in the specifications issued for this kind of systems.

The success achieved by those guidelines during the years places them as an „inofficial" standardised design and homologation procedure. At a **European legislative level**, a milestone had then been settled by the European Commission, with the Decision of 26 May 2011 *„concerning a technical specification for interoperability relating to the rolling stock subsystem Locomotives and passenger rolling stock of the trans-European conventional rail system".*

The above mentioned TSI in fact allows trains **to substitute** the traditional **fire barrier doors** with alternative solution for avoiding fire spread. The so-defined „Fire Spreading Prevention Measures" are such technologies, proposed in alternative to fire barriers, which can avoid the spread of the fire from one car to the other one. This advantage was first identified and exploited by Stadler for its **FLIRT** EMUs built for S-Bahn Basel services and fitted for operation into France. They have been homologated in accordance with this TSI with an active high pressure water mist system instead of fire barriers, with relevant positive impact in the open-gangway architecture, in weight management and in the quality and safety of life on board.

Photo: Petr Kadeřávek

The „FLIRT Alsace" was the first train to be homologated according to the TSI with fire spreading prevention measures. Here we see SBB's RABe 522 203 at Stadler's IBS Erlen commissioning centre on 9 December 2010. On the right are KISSes RABe 511 001 and 002.

Eventually, a special mention is deserved by the **Italian case**: since 2005 a national ministerial decree forces all new trains placed in service starting from 2006 as well as the whole fleet starting from 2021 to have an active fire protection system on board.

This requirement is anyhow neither a deal for technologies nor a source of controversy in homologation: the Alstom-built **AGV** EMU, used by the first Italian private high-speed operator NTV, was the first train to merge this new challenging Italian requirement and the European TSIs, being now the only train homologated both according to the Italian law and the TSI High Speed, the technical specification in force according to the EU Commission Decision of 21 February 2008 *„concerning a technical specification for interoperability relating to the rolling stock subsystem of the trans-European high-speed rail system".*

Michele Barbagli

Diagrams and photos, unless otherwise cited, by Fogtec