Railvolution

The Professional Two-Monthly Magazine Of Rail Transport Worldwide

Volume 11 No. 4/11

€ 10.00

TRAKO Preview
1,520 mm Gauge News
Safe Tank Car In Detail
FLIRT EMUs For Belarus
The Great Czech Raildays Report

Railvolution No 1 In Europe

9 771211 185007 04

In March 2010, following an international invitation to tender, state operator Belarusskaya Chygunka (BCh) awarded Stadler a contract for ten four-car FLIRT EMUs, to replace older electric stock. Six are being fitted out for suburban services, four for middle distance operations. They will be used in connection with the 2014 IIHF World Championship ice hockey event, to be held in Minsk, and the first three are now in commercial service.

Only ten months after the contract had been signed, on 6 January 2011, Stadler formally handed over the first of the new trains to BCh at the company's Bussnang works. This was feasible because the manufacturer is still building the batch of Class **Sm5** FLIRTs for the Helsinki suburban operator Junakalusto. So that the same production line could be used for both batches of trains, BCh agreed to the same bodyshell width of 3,200 mm, instead of the more generous 3,500 mm which is standard for passenger stock in Belarus.

There are, however, a few features which **distinguish** these first FLIRTs destined for a former member of the USSR from those being built for Finland. The track gauge in the latter country is still the original 1,524 mm, whereas in Russia and the CIS countries it has been „tightened" over the years to 1,520 mm. In Belarus the ATP system is KLUB-U, and a different train radio type is required. The pantograph design is different, too, as are the requirements for exterior lighting. Some stations have platforms which are only 200 mm above rail top, so the entrance vestibules, where floor height is 600 mm, are fitted with two retractable steps to facilitate access.

BCh also requested two types of **interior** configuration, since it is planned to use six of the new trains on suburban services, and four on middle distance routes, where lower density seating is more appropriate. The Belarus FLIRTs are thus of two classes - EP^G (Elektropoezd gorodskoy - Suburban EMU) and EP^R (Elektropoezd regionalny - Middle Distance EMU), and this is reflected in their liveries, red and grey, and blue and grey, respectively. All the Finnish FLIRTs are fitted out for suburban services.

Bogies

There are two powered bogies with a maximum axle-load of 20.5 t, situated under the cab ends and adjacent machinery spaces, and three non-powered Jacobs bogies, each with a maximum axle-load of 19.5 t. The 1,520 mm gauge wheelsets comply with GOST norms and are manufactured by Stadler at its new competence centre for bogie production in Winterthur where also the monobloc wheels are pressed onto forged axles. All five bogies incorporate pneumatic suspension equipped with a self-levelling system, while an emergency suspension system ensures that the train can continue in service at normal speeds even if the pneumatic one fails.

Under normal operating conditions the main **brake** is the electrodynamic one, though the pneumatic one can be blended in as well if required. Disc brakes are fitted to all the wheels, and the non-powered bogies are equipped with heated electromagnetic rail brakes and spring-loaded parking brakes. Sanders and flange lubricators are also fitted. The bogies are fitted with a KLUB-U ATP receiving coil.

Driveline

As far as possible, this is similar to that for the Class Sm5 FLIRTs, and the only significant difference concerns the pantographs. In Belarus the overhead wire is between 5.5 and 7.0 mm above rail top, whereas in Finland its height varies between 5.6 and 6.5 m. There are two traction transformers, four traction converters, and four traction motors. These are located in the two end cars, and are designed with a high level of redundancy so as to ensure that complete train failures out on the line are a rarity.

Each of the power blocks houses a BORDLINE CC750 **traction** converter, manufactured by ABB Schweiz. Each water-cooled IGBT traction converter supplies a variable voltage of variable frequency to the traction motors of the adjacent powered bogie. Each of the type TMF 59-39-4 asynchronous traction motors, built by Traktionssysteme Austria of Wiener Neudorf, has

On 30 July 2011 EP^G-003 is seen at Belarus station serving the satellite town of Zaslavl, some 20 km northwest of Minsk, on the shore of the Lake Zaslauskae. On the Belarus rail network the station nameboards still bear the Russian names of the settlements they serve, even though the place names themselves are now officially spelt in the Belarussian version.

Photo: Ivan Voiteshonok

Principal Technical Data Of Class EP^G/EP^R EMUs

Track Gauge	1,520 mm
Axle Arrangement	Bo' 2' 2' 2' Bo'
Operating Voltage	25 kV 50 Hz
Maximum Speed	160 km/h
Nominal Rated Power	2,000 kW
Maximum Rated Power	2,600 kW
Starting Tractive Force (Up To 47 km/h)	200 kN
Acceleration	1.2 m/s²
Total Length Over Couplings	75,200 mm
Bodyshell Width	3,200 mm
Maximum Height Over Rail Top	4,400mm
Floor Height Over Rail Top	
- Low-FLoor Area	600 mm
- Inter-Car Gangway	1,050 mm
- High-Floor Area	1,120 mm
Weight In Service	132.5 t
Longitudinal Compressive Force	1,500 kN
Powered Wheel Diameter, New	860 mm
Non-Powered Wheel Diameter, New	800 mm
Seats (Including Tip-Ups)	260 (suburban)
	216 (inter-regional)
Standees (4 per m²)	346 (suburban)
	348 (inter-regional)

FLIRT EMUs For Belarus

Photo: Ivan Voiteshonok

The CL (City Lines) logo. BCh plans to use different flower symbols to designate service types - a red aster for CL. Note the use of three languages - the upper one is Russian, the middle one is Belarussian.

The Regional Lines EP^{R} EMUs will wear a blue and grey livery. Here is a photomontage of one of these FLIRTs awaiting departure from Minsk for Brest.

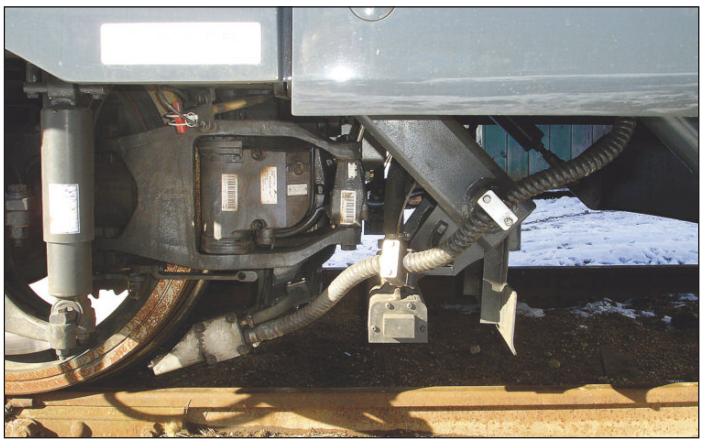

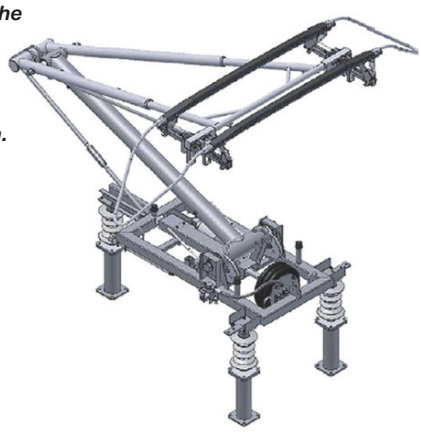

Like those for other FLIRT EMUs, the pantographs for the Belarus trains are produced by the Swiss company Richard of Murgenthal. The current collecting skid, which is 1,500 mm wide, is made of carbon.

The left-hand photo shows a heated sanding tube, of the same type as those fitted on the bogies of the Finnish FLIRTs. In the centre is the reception coil for the Belarus KLUB-U ATP system.

In the lower photo is a view of the driving console. The sloping panel in the centre houses the KLUB-U ATP equipment.

a continuous power rating of 500 kW and a maximum one of 750 kW. The axle-mounted gearboxes are of Voith's type SZH-595. The electrodynamic brake is recuperative, thus ensuring that overall energy consumption is kept as low as possible, and wear and tear on the other types of brake are thus minimised. The lively acceleration and braking performance of the FLIRTs is ideal for suburban services, with frequent station stops.

The train **control** system involves a CAN bus line, the components developed from those tried and tested on earlier FLIRTs and produced by Selectron. However, the modules are more powerful, with more inputs and outputs, and moreover they have been redesigned to function well under extreme winter conditions, with temperatures plunging as low as -40 °C. The control technology is designed to be 100 % redundant - any component failures will have no effect on the train's operation or the comfort of driver and passengers. Depot staff can use GPRS modems to access the train's operational data and any diagnostic messages whenever they wish to do so. The maintenance procedures can thus be optimised and various tasks undertaken on the most opportune occasions, minimising the time the train spends out of service for such attention.

Interior

BCh specified the design of the passenger accommodation, seating configurations and colour schemes. The suburban EP^G trains are to be used mainly on local services out of Minsk, and have high density 2 + 3 seating, while the EP^R EMUs for middle distance services have more spacious 2 + 2 seating. All seating is in bays, and one 230 V socket is provided for each row of seats, for passengers' personal electronic equipment. As is the case with older BCh suburban EMUs, only one class of accommodation is offered on board the Class EP^G trains.

The passenger accommodation has good natural illumination, and the ambience is welcoming. The spacious entrance **vestibules** are designed to speed boarding and alighting. All four cars have a number of tip-up seats, in cars A, B and D these providing sufficient space for the stowage of prams, whilst in car C there is a roomy multipurpose area with a row of tip-up seats, a wheelchair-accessible WC cubicle, two wheelchair harness points, and a space for bikes. All accommodation in both versions of the Belarus FLIRT complies with the TSI PRM (Persons with Reduced Mobility) standard. The WC is of vacuum retention type, as installed on various other FLIRT batches, while the fresh water and waste tanks each have a capacity of 400 litres. A boiler is provided to heat the fresh water in winter.

Doors

The entrance vestibules are situated within the low floor areas, thus enabling easy boarding and alighting. The double-leaf BIDS entrance doors (see R 1/11, p. 72) are of swivel-sliding type, offering an aperture 1,300 mm wide and 2,120 mm high, so station dwell time is kept to a minimum, even during busy periods of the day. The movement of passengers along the length of the train is facilitated by the absence of bulkheads with doors between the vestibules and seating areas.

With platform heights varying between 200 and 550 mm, two **retractable steps** are provided. These are also necessary because the FLIRTs are 300 mm narrower than other Belarus passenger stock, so the gap between platform edge and train floor is 150 mm wider than in the case of other trains. Drivers are able to select the side of the train on which the doors are to be activated for opening, and also whether one or two steps are to be extended. Opening is passenger-activated and closing takes place automatically after five seconds unless passengers are still boarding or alighting, to maintain a comfortable interior temperature in summer and in winter, and hence to economise on energy consumption.

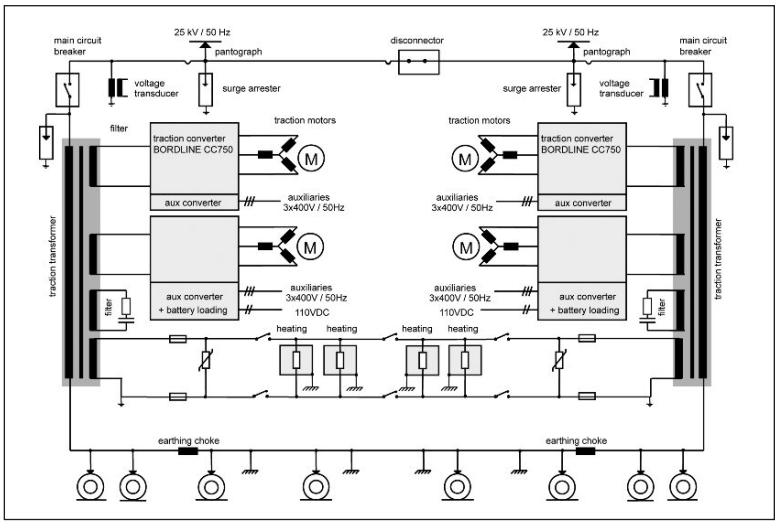

Schematic diagram of the traction circuits of a Belarus FLIRT EMU.

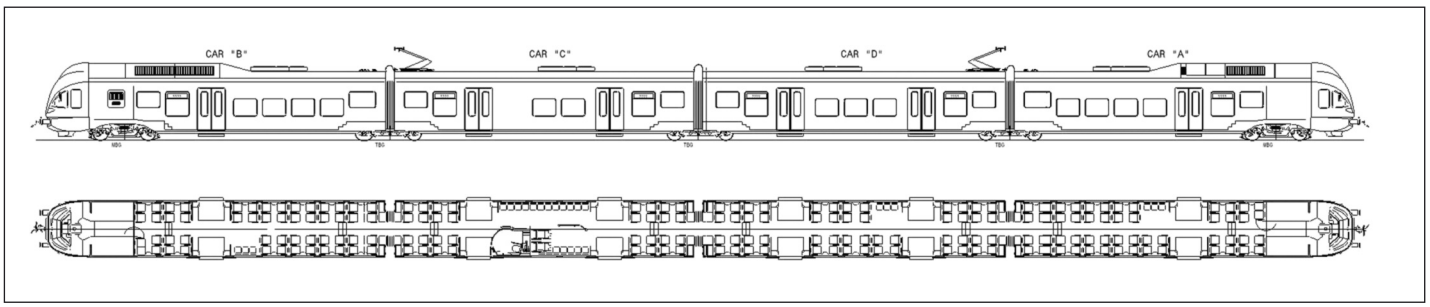

Side profile and general arrangement plan of the EP^R middle-distance EMUs (EP^R-001 to 004). The suburban FLIRTs are numbered EP^G-001 to 006.

The interior of an EP^G EMU. The TFT screens are positioned just above eye level for easy viewing.

The multi-purpose area in the „C“ intermediate car, with tip-up seats, a wheelchair-accessible WC cubicle, two wheelchair harness points, and storage space for bikes.

Optical sensors and highly sensitive rubber edging strips incorporating electronic sensors ensure that when the doors close they do not trap objects or passengers.

Insulation And Heating

The Belarus FLIRTs incorporate far more insulation than do those designed for less extreme climes. BCh specified a -40 °C minimum ambient **temperature** for operation, the same as for the Finnish FLIRTs, though the latter are designed for a maximum ambient temperature of +35 °C, and the Belarus ones, for +40 °C. The insulation materials were chosen carefully and are of a type which is impermeable to water. The windows are triple-glazed, with slight tinting, together with a film which cuts out much of the heating effect of the sun's rays. As a result the whole train has a U value of between 1.0 and 1.1 W/m²K. Heated floor plates in the entrance vestibules and on the door thresholds prevent the ingress of snow, and reduce the risk of passengers slipping on icy surfaces.

The heating and air conditioning are designed to cope well with extreme temperatures. Even if the outside temperature is as low as -40 °C (rare in Belarus, though), a comfortable +20 °C can be maintained in the passenger accommodation without over-stretching the system. The large amount of insulation installed in the train ensures that, even with the heating and cooling systems working under difficult conditions, their energy consumption is kept to a minimum.

The door pillars incorporate powerful hot air (+40 °C) **blowers** rated at 20 kW each to ensure that interior heat loss and the ingress of cold outside air are minimised when the doors are open in severe winter weather. The blowing force can be adjusted according to the severity of exterior conditions, and the blowers can also be used for pre-heating after the train has been out of use for a while. The absence of bulkheads with doors between the entrance vestibules and the seating areas also assists in the circulation of warm air, and the time required to heat a cold train to a comfortable level is considerably less than that specified by UIC norms, so no separate pre-heating regime to warm the train before its driver arrives is necessary. As is the case with the Class Sm5 FLIRTs, the heating takes place while the driver is getting the train ready for duty.

The **air conditioning** system is the standard 22 kW one, with one unit per car, fitted on other FLIRTs. The units are roof-mounted and are supplemented by powerful heating convectors in the interior. A heat recovery system uses the stale warm outgoing air from the passenger accommodation to pre-heat cool incoming air, via a heat exchanger. The result is a substantial reduction in the amount of energy required for heating purposes. Each cab has its own 4 kW air conditioning unit and a powerful hot air blower, so that a comfortable working temperature for the driver is quickly attained.

Passenger Information System

Information is supplied via a flexible, Ethernet-based system, complying with the UIC 568 norm, and incorporating UIC wiring. On the cab ends there are large destination and next stop text panels, these supplemented by six smaller ones on each side of the train, and yet another, stating the train's destination, adjacent to each entrance door. **Inside** the train there are no fewer than ten TFT screens, which in addition to broadcasting travel information, exterior temperature, time and line number, can also run advertising videos and other forms of visual entertainment. Under normal circumstances the public address system makes use of pre-recorded announcements, which are activated automatically. There is also a touch screen in each cab so that the train

The WC cubicle is similar to those of SBB's FLIRTs, with a vacuum retention WC, a washbasin, soap dispenser, hand dryer, and a table for changing babies' nappies.

The entrance doors are produced by Bode of Kassel, and the door pillars incorporate grab rails, opening buttons, and warm air blowers.

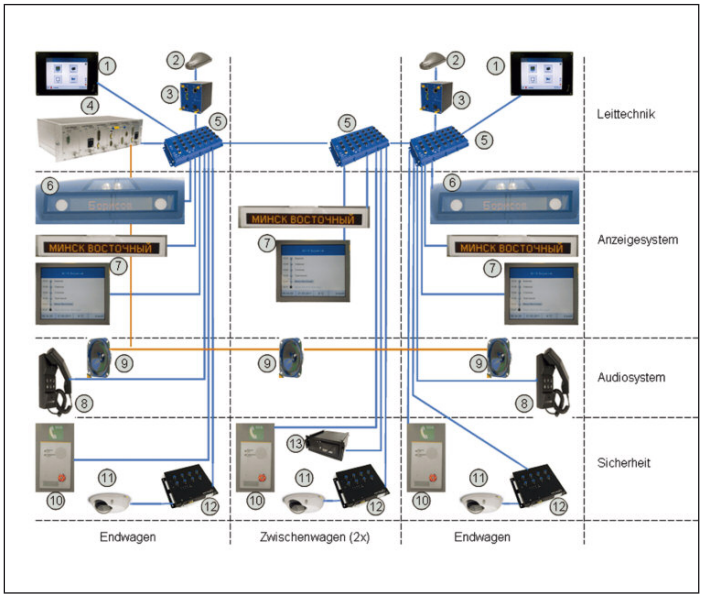

Schematic diagram of the relationships between various on-board systems: 1 - Crew displays, 2 - Antennae, 3 - WLAN access points, 4 - Central unit, 5 - Ethernet switches, 6 - LED exterior panels, 7 - LED and TFT interior panels, 8 - Driver's phones, 9 - Public address microphones, 10 - Emergency intercom, 11 - CCTV cameras, 12 - Power supply for CCTV cameras, 13 - CCTV monitoring server.

traktionssysteme austria

Drive Systems for the Rail Car Industry

traktionssysteme austria

www.traktionssysteme.at

Traktionssysteme Austria GmbH
Brown-Boveri-Strasse 1
2351 Wiener Neudorf, Austria
Tel.: +43 2236 8118 - 0
Fax: +43 2236 8118 - 237
E-mail: office@traktionssysteme.at

traktionssysteme austria


Photo: Ivan Voiteshonok

At platforms which are just 200 mm high above rail top an additional entrance step slides out to facilitate boarding, floor height here being 600 mm.

crew can modify the information being broadcast or to make their own impromptu public address announcements.

On-Board Safety

The trains fully comply with Belarus safety norms. They were subjected to climatic testing according to GOST standards. Each entrance vestibule has an emergency **intercom**, enabling passengers in distress to communicate with the driver. CCTVs are installed throughout the interior, and their footage can be viewed by operating staff until at least 72 hours after filming took place. These CCTVs are designed so that should a passenger operate the emergency braking system, request emergency opening of doors, use an emergency intercom, or should a fire alarm be activated, the cameras nearby will immediately focus on these areas and send the images to the screen in the cab.

In the event of a **fire** alarm being activated, appropriate strategies are immediately adopted. Fire detectors are installed both in the passenger accommodation and in the two machinery spaces behind each cab. The Fogtec fire detection system, which can function in temperatures as low as -40 °C, is of similar design to that installed in the Finnish FLIRTs, with 16 smoke detectors in the passenger accommodation and one control unit.

ATP And Other In-Cab Equipment

In Belarus the standard ATP system is KLUB-U (Kompleksnoe lokomotivnoe ustroystvo bezopasnosti - Unifitsirovannoe, Complex Locomotive Safety Device - Unified), introduced by RZD in the 1990s. This succeeded the earlier Soviet system, ALSN (Avtomaticheskaya lokomotivnaya signalizatsiya nepreryvnogo deystviya, Continuous Automatic Train Signalling), which functions by means of modulated pulses inducted into the rails.

The BCh FLIRTs are thus fitted with on-board **KLUB-U** equipment, an RVS-1 train radio, and a BR-U data recording system. The integration of all these devices in the driving consoles was realised in consultation with the operator, and conforms to the latter's norms. All other console equipment is identical to that on the Finnish FLIRTs. During test runs Belarus drivers commented very favourably on the ride quality, in-cab fittings and console layout of the new trains.


Photo: Petr Kadeřávek

EP^{G}-002 and 003 under construction at Bussnang on 9 December 2010.

Testing

On 12 February 2011 the cars forming the first train of the batch arrived by road from Switzerland at Baranovichi depot. On 25 February the second train entered the country, being railed at Baranovichi shortly afterwards. Once the finishing touches had been applied to it, it was dispatched on 2 March 2011 to Minsk, with commissioning and testing starting soon afterwards. The third of the batch was delivered in mid-March, and was used for train crew and maintenance staff training, while EP^{G}-001 and 002 were mainly employed on type testing. All three are now based at Minsk Motorvagonnoe **depot** (code TCh-9), used for accommodating multiple units. Here a dedicated and sophisticated FLIRT maintenance base has been created. It includes a 16-jack lifting device for raising a complete train to a height of 1.5 m, and a diagnostics centre. Some depot staff and the first FLIRT drivers were sent to Switzerland for a training course.

The first three FLIRTs were tested on the lines around the capital, clocking up 18,000 km between them, and by mid-summer 2011 this procedure, together with the training of drivers and maintenance staff, was complete. Stadler and BCh undertook mechanical, aerodynamic, noise, ergonomics, EMC, fire safety, environmental friendliness, component function and train performance tests. The maximum speed reached on test, 176 km/h (160 km/h plus 10 %), was a new rail **speed record** for Belarus. Acceleration tests demonstrated that the train can reach 120 km/h in just 43 seconds, which augers well for the slashing of journey times - BCh's older EMUs are unable to match this.

The next landmark date was 1 July 2011. On that day the EP^{G}-001, 002 and 003 FLIRTs entered test commercial service, operating out of Minsk Passazhirsky (passenger station) with departures at 07.05, 08.57, 17.15 and 19.10, to Zaslavl/Belarus (about 20 km to the northwest of the capital on the main line to Vilnius), departing thence at 08.02, 10.12, 18.05, and 20.10 to Minsk. During the **first month** over 41,000 passengers were carried, BCh closely monitoring on-board service and ticket checking procedures. A flat single fare of 2,000 BYR (Belarussian rubles, 0.51 EUR) applies on this route, regardless of distance travelled.

Operation

The metropolitan area of the Belarus capital has a population of over 2 million,


Photo: Sven Klein

EP^{G}-003 at Bussnang on 14 February 2011 during a static testing.

On 12 February 2011 the cars forming EP^{G}-001 EMU arrived at Baranovichi depot (about 100 km southwest of Minsk). Here we see one of the end cars about to be unloaded and railed. The cars were coupled up the same day.

Photo: Ivan Voiteshonok

EP^{G}-001 at the main station in Minsk on 7 August 2011. The FLIRTs are so far the only trains in Belarus to be equipped with Scharfenberg centre couplings, in a land where the SA3 coupling reigns supreme.

so the potential for suburban passenger train services is considerable. In September 2011, having completed all their authorisation testing, the three FLIRTs entered regular commercial service on four local routes radiating from Minsk, to Molodechno (in the northwest), Osipovichi (in the southeast), Baranovichi (in the southwest) and Orsha (in the northeast). These form the **City Lines** network. The remaining suburban FLIRTs EP^{G}-004 to 006 are to be delivered in 2012.

Deliveries of the EP^{R}-001 to 004 FLIRTs destined for RL - **Regional Lines** middle distance services are to run from October 2011 until April 2012, with three being handed over by the end of 2011.

For Belarusskaya Chygunka the FLIRTs herald a new era, offering passengers the same high level of comfort found elsewhere in Europe on trains of this type, and also a new service quality. Under a policy prepared in 2010, BCh passenger services are to be subdivided into various **categories** - international, inter-provincial, provincial, urban and commercial. Commercial would appear to refer to the charter market - for travel agencies and private groups. Trains used on the two middle distance groups of services, linking provincial capitals and uniting them with Minsk, will be fitted with two classes of accommodation - „economy“ and „business“. Infrastructure upgrading is currently taking place on the Minsk - Zhdanovichi line, and stations are being modernised to make them easily accessible by handicapped travellers.

The **next chapter** of the history of FLIRTs in the 1,520 mm gauge empire promises to be an interesting one. During the official FLIRT presentation event in Minsk on 22 March 2011 Stadler and the state operator signed a co-operation agreement covering train maintenance and repair. They also signed a Statement of Intent regarding the involvement of Belarus industries in assembling future batches of FLIRTs, these not only for BCh but also for operators in other CIS member countries.

Fritz Schaad
Stadler Bussnang AG

Diagrams and photos, unless otherwise cited: Stadler

EMU Traction Package - Accurate As A Swiss Watch

Based on the very positive field-experience in many countries, from Scandinavia to Northern Africa, the powerful and compact ABB traction package for FLIRT EMUs from Stadler Rail is also employed in the FLIRT trains for Belarus. The base package, consisting of two very compact converter cabinets and a lightweight roof-mounted traction transformer, is optimised for reliability and availability, energy-efficiency, and maximum space for the passengers.

Global References

For the traction package of the Belarus FLIRT EMUs, ABB was chosen, taken into account ABB's vast experience with traction systems of all types of rail electrification. As a major independent key component supplier, ABB has manufactured thousands of traction transformers, thousands of propulsion and auxiliary converters and thousands of traction motors currently in operation worldwide. While the traction packages for the Belarus FLIRTs are entirely manufactured in Switzerland, ABB's presence in about 100 countries is an ideal base for local partnerships and support.

Traction Package Overview

The line voltage of 25 kV AC from the catenary is stepped down by the main transformer to feed the low-voltage line power modules of the BORDLINE® CC750 AC Compact Converters. Each of the two latters is an autonomous system feeding one traction motor and an integrated auxiliary converter. Every second compact converter also features an integrated battery charger. Each FLIRT EMU has two of these traction packages on board, i. e. four BORDLINE® CC750 AC Compact Converters, leading to a maximum power at wheel of 2,600 kW and high redundancy and availability. Energy recuperated during braking is fed back through the same chain into the traction supply network. For Belarus, the equipment is designed for temperatures down to -40 °C.

Traction Transformer

The Belarus FLIRTs are equipped with LOT 1100, tailor-made, very lightweight transformers for roof-mounting and maximum low-floor area and passenger space. By using high-frequency, low-voltage IGBTs and advanced grid control in the traction converters, the transformer impedance is reduced by up to a factor of two compared to medium voltage solutions. This also contributes to lower transformer weight and higher energy efficiency of the EMU. The 50 Hz transformer provides two secondary windings for the two compact converters as well as a harmonic filter and a heating winding.

BORDLINE® CC750 AC Compact Converters

Apart of their reliability, ABB traction converters are known for their compactness and high integration, their modular design, and easy maintenance. They are efficiently water-cooled, resulting in long lifetime of all the components and small converter size. The coolant (regular tap water with glycol) dissipates energy through an external heat exchanger. The traction converters for FLIRT EMUs are located in the two end-cars and housed in a rugged, traction-proven IP54 cabinet. The control module is mounted on a swing frame in front of the power modules, providing excellent accessibility of all key components.

Every BORDLINE® CC750 AC Compact Converter contains an AC 800PEC control module, an input contactor and precharger, an active rectifier (4Q), a DC-link filter, a motor inverter, a braking chopper, and an auxiliary converter. In every traction package, one compact converter also features an 8.5 kW battery charger for 110 V DC, the other a step-down converter to provide 24 V DC output. Motor inverter, auxiliary converter and battery charger are all connected to a common intermediate circuit with high energy storage capacity. Because of the sufficiently large DC-link capacitance no series resonant circuit filter is necessary.

The line converter operates with a PWM pulse pattern at a constant carrier frequency of 2 kHz. For the motor current converter, an asynchronous PWM technique is applied. With high switching frequency in the kilo-Hertz domain, BORDLINE® CC750 AC generates a quasi-sinusoidal current waveform, which dramatically reduces the losses, the audible noise and the mechanical stress on the traction motor. The Voltage Limiter Unit chopper limits the DC-link voltage to 106 %. The line-side converter, the motor inverter and the braking chopper are all implemented with the same power modules (see photo on the adjacent page) and allow easy handling.

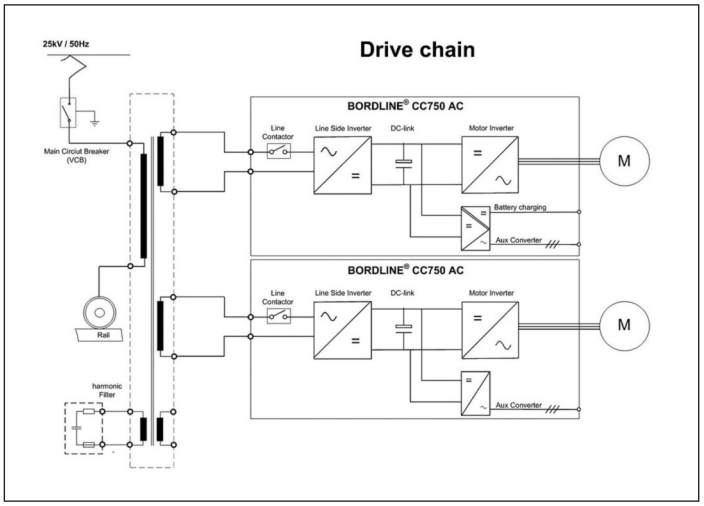

Above: a single line diagram.

Integrated Auxiliary Converter

The auxiliary converter generates a current limited three-phase output voltage directly from the DC-link voltage.

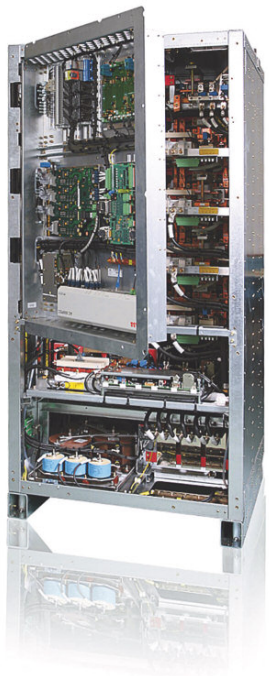

Photo on the right: ABB's BORDLINE® CC750 AC Compact Converter.

ABB traction transformer of LOT 1100 type.

Technical Data (Transformer And 2 Compact Converters)

Line Voltage	25 kV AC 50 Hz
Propulsion Output	0 to 500 V AC, (2x) 690 kW
Braking Chopper	(2x) 600 kW
Auxiliary Converter	(2x) 3 x 400 V/50 Hz, 70 kVA
Battery Charger	110 V DC/24 V DC, 8.5 kW
Vehicle Control Interface	Can Open, I/Os
Dimensions (L x W x H)	
- Traction Transformer	3,060 x 2,030 x 900 mm
- Traction Converter	900 x 850 x 2,000 mm
Weight	
- Traction Transformer	2,850 kg
- Traction Converter	750 kg

A sine filter smoothes the PWM modulated output voltage, so that a sine wave voltage waveform is available at the output terminals of the auxiliary converter. Start-up of heavy loads such as air compressors is possible due to the overload capability. If overload limits are exceeded, the amplitude of the output current is limited, and the output voltage together with the frequency is slightly dynamically reduced.

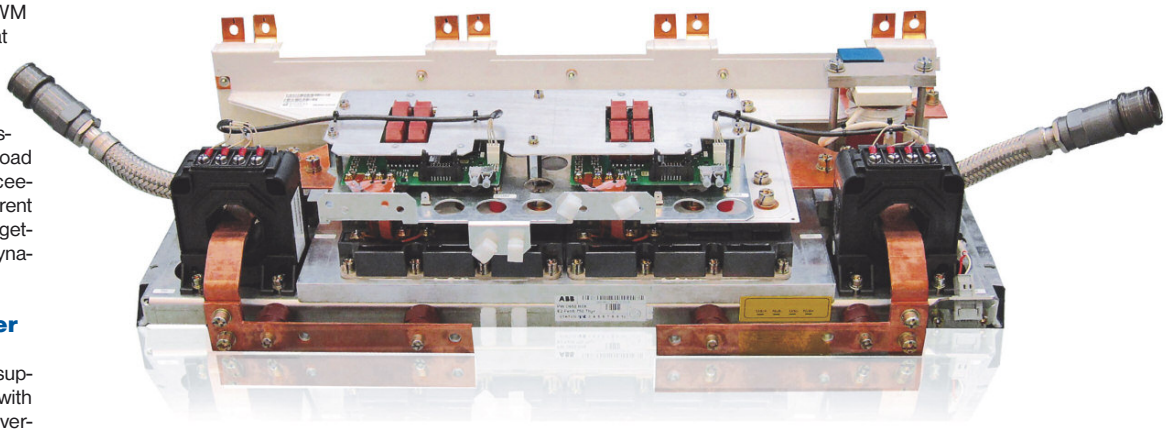

Upper photo: standardized power module of BORDLINE® CC750 AC traction converter.

Integrated Battery Charger

The isolated DC/DC converter supplying the DC voltage operates with a pulse frequency of 20 kHz. Conversion is effected using an IGBT full-bridge circuit, medium frequency transformer, output rectifier and an output filter. The rectified and smoothed output voltage feeds the bus-bars of the vehicle via decoupling diodes, which are connected to the DC loads. A separate output with current limiting is provided for the battery charging. The battery is charged using an IU0U characteristic with temperature compensation.

The DC/DC converter is prearranged so that it can be used in parallel with a further unit. A control characteristic implemented in the control electronics ensures a passive load distribution between the two units in the steady state.

Converter Control System

Reliability, speed, and precision which are desired in converters and drives require a powerful control unit. The ABB high-end control platform AC 800PEC is used in all ABB traction converters, as well as in a wide range of industrial applications. This unit covers all control and protection functions, sensor inputs, diagnostics and it provides a simple interface to the vehicle control.

In cooperation with the train control management system, standard ABB software modules control for example the slip-slide-functionality, pantograph bounce, or enhanced electrical braking mode. Modular visual programming ensures quick, reliable coding and easy adaptation of the control software. This leads to fast and flexible engineering for tailor-made solutions in customer projects.

In order to reduce line harmonic currents a fiber optic link is installed between the two BORDLINE® CC750 AC converters. With a synchronized and phase shifted operation of the two line converters, the harmonic currents are substantially reduced. A further reduction of harmonic currents is provided by the harmonic filter which is implemented in the transformer and an external resistor and capacitor.

Diagnostic And Service

Preventive maintenance for the robust equipment of the ABB traction package is negligible and spans multiple-year intervals. The modular design with highly standardized components ensures excellent reliability, spare parts management, and optimized life cycle cost. For diagnostics, an Ethernet interface is available. In-depth data can be obtained using BORDLINE®-View, a diagnostic tool including an advanced self-diagnosis function, which gives advice and instructions for service and repair. It runs on standard PCs.

Harald Hepp

Photos and drawing: ABB

GTW 2/6s In Texas, FLIRTs In Fribourg

In R 3/09, p. 10, we reported on the order placed with Stadler for eleven GTW 2/6 DMUs by DCTA (Denton County Transportation Authority), in Texas. On 3 August 2011 the first two trains, 101 and 102, were disembarked at Galveston following their Atlantic crossing, and a bit later in the month were moved to Lewisville, near Carrollton, on the outskirts of Dallas.

The DMUs had already been subjected to initial commissioning tests at Bussnang, and further trials in their new home territory are planned for late August, September and October, in readiness for handing over at the end of the latter month. The trains are destined for the new A-train line between Denton and Carrollton. At Trinity Mills Road, in Carrollton, there will be an intermodal interchange with the Dallas Area Rapid Transit (DART) tramway and with bus services to and from other towns and villages in North Texas. ***The accompanying photo shows 103 at Bussnang on 25 July, shortly before it left for Bremerhaven*** to be shipped to Galveston with 104, which together with 105 was undergoing initial commissioning early in August. 106 and 107 are currently being built, and the last of the batch, 111, is scheduled for handing over in mid-2012.

Also visible in this view is the second of the eight four-car FLIRT EMUs ordered by Transports publics fribourgeois (TPF) in Switzerland. The first four of these trains are to be delivered until December 2011, but under the terms of the contract the remainder are not scheduled for handing over before 2014. The trains will be used on a new through service between Fribourg and stations on the line from Bulle to Romont, part of an extensive timetable reworking exercise by TPF. They will be serviced at a new depot being built at Planchy, on the outskirts of Bulle, and will also use a new stabling point at Givisiez.

Petr Kadeřávek

WESTBahn Progress

The third KISS was outshopped from Stadler's Altenrhein works during the second half of August 2011, while 4010 001 and 002 paid their first visit to Austria, arriving on 15th and 20th of the month. Tests focused on disturbing currents (especially when running in multiple), aerodynamics and overall technical functionality. On 17 August 2011, the WESTBahn KISS reached a speed of 200 km/h for the first time. During further testing programmes the units ran on the Linz - Amstetten - Wien - Salzburg, Linz - Graz and Linz - Wien ZVbf. (central marshalling yard) - Sigmundsherberg routes. ***Here we see 4010 001 and 002 on 25 August 2011 crossing Hundsdorfer viaduct on the Tauernbahn northern ramp as train SPROB 97758 Linz - Salzburg - Graz.*** On 6 September, both EMUs were scheduled to return to Switzerland.

On 9 August 2011, WESTBahn and ÖBB announced that they had reached an agreement on infrastructure capacity conflict. WESTBahn has agreed to give up the initially agreed frame times for its train paths, while ÖBB Personenverkehr relinquished other three train paths, which now can be used by WESTBahn. Anyway WESTBahn must include in its calculations higher costs for infrastructure use than supposed around 8 million EUR annually instead of 7 million, on account of ÖBB Infrastructure increasing the fees.

As a reaction to the private newcomer's planned services, ÖBB already announced that it would unveil a free internet connection, at least in some railjet trains during 2011.

On 23 August 2011 WESTBahn announced that the negotiations with SNCF had been successfully completed and that the latter had thus achieved a 26 % stake in RAIL Holding, WETSBahn's owner, by means of increasing the company's capital. The other stakeholders and their capital share remain unchanged, with Haselsteiner Familien-Privatstifung, Stefan Wehinger and SNCF holding 26 % each and 22 % held by Augusta Holding.

Petr Kadeřávek
Photo: Kurt Feuerfeil

In late August 2011 the first **EP^{R} FLIRT** EMU destined for Regional Lines was outshopped at Bussnang works. In September it will be submitted to the preliminary acceptance by BCh staff and in the following month it is expected to arrive at Minsk.

On 12 July 2011, at the opening of the Swissrail Forum in Moskva, it was announced that Stadler has won its **first order from Russia**, worth around 240 million CHF, this being for 100 four-axle diesel modules (similar to those for Elektriraudtee FLIRT DMUs - see R 1/11, p. 45). They will be used to power the new 160 km/h DMUs, currently being developed at Metrovagonmash for RZD, which has fifty on order. Delivery of the first two prototype modules, each of 1,100 kW power and about 7.3 m in length over bogie axis, will take place in late 2012. Certification and delivery of the first new DMU to RZD is scheduled for the first quarter of 2014 with the remaining 49 trains to follow on soon afterwards.

More Stadler EMUs For Frauenfeld-Wil

On 30 June 2011 Stadler announced that the company had been awarded a 31 million CHF (just 28 million EUR nowadays, since the CHF is very strong against the latter currency) by ***Frauenfeld-Wil-Bahn (FW) for five new low floor metre gauge EMUs***. FW was the recipient of the very first two EMUs built by Peter Spuhler and his 18 staff in the early 1990s after he had taken over Stadler in 1989, the bold step which launched the Swiss manufacturer on its highly successful career. Moreover, the new trains will operate in Stadler's two „home" cantons - Thurgau and St. Gallen.

FW reckons that local traffic on its lines is set to increase in the future, and to meet the rising demand decided in summer 2009 to acquire five new EMUs. The invitation to tender came in autumn 2010, and in January 2011 the operator decided to accept the bid submitted by Stadler. The trains will be 60 % low floor, with one saloon fitted out for first class passengers. To meet the specific conditions of the FW line, they will be designed to negotiate curves as tight as 40 m radius, and gradients as steep as 46 ‰, and will be equipped with magnetic rail brakes. They will also be fitted with specially designed front crash elements, because of frequent road crossings.

In other words the EMUs will be custom-built, the latter feature being one of the key elements in Stadler's success in the market for new trains. In 2010 no fewer than 20 % of the trains the manufacturer built were tailored very specifically to clients' needs. Start of commercial service of the new FW trains is scheduled for summer 2013.

Stadler


Photo: UTY


Photo: Yves Steenebruggen

An „Afrosiyob“ In Tashkent

„Afrosiyob“ is the brand name for the two 1,520 mm gauge Talgo 250 trains ordered by Uzbekistan state operator Uzbekistan Temir Yollari (UTY), now a joint stock company. The roots of the project date back to July 2009, when UTY and Talgo signed a Memorandum of Understanding with a view to improving train services between Tashkent and Samarkand. Then on 5 January 2010 Islam Karimov, the President of Uzbekistan, put his signature to a resolution to acquire two Talgo 250 trains at a cost of 38 million EUR, with finance being provide by UTY (50 %) and by the Uzbekistan Reconstruction and Development Fund (50 %), in the form of a ten-year loan including a two-year grace period, at an APR rate of 2 % and with a refinancing margin of 0.25 %, from the Uzbekistan National Bank for Foreign Economic Activity.

The 250 km/h trains consist of two power cars and nine intermediate cars, one of them being a catering vehicle. Facilities are provided for handicapped travellers, and there are seats for 257 passengers in three classes, VIP, first and economy - slightly lower than the capacity of RENFE's Class 130s, which have 299 seats. ATP and train radio are installed. Under the terms of the contract Talgo is to provide spare parts during the warranty period and to assist in servicing and maintenance over a period of 51 months. Train crews and maintenance staff received training in Spain from both RENFE and Talgo. The first of the new trains was delivered on 22 July 2011, and the second is scheduled to arrive in September.

Substantial upgrading has taken place on the 344 km main line linking Tashkent with Samarkand. Two major rebuilds, 59.3 km between Jizzakh and Dashtabad, and 34.2 km between Dashtabad and Yangiyer-Yangi, the latter now with double track, have been undertaken, while elsewhere installation of modern signalling and communication systems has taken place, catenary has been renewed, energy-saving measures have been adopted, and stations, including those at Tashkent and Samarkand, have been modernised. The line has now been fenced along its entire length.

The left-hand photo shows the first of the new „Afrosiyob“ trains at the refurbished Tashkent Passazhirsky station on 23 July 2011. Afrosiyob is the old heart of Samarkand city, which is now on the edge of the modern urban area, occupying a hilltop (Afrosiab) site of around 200 hectares, and dating back at least to the 8th century BC. At that time it was one of the largest commercial and cultural communities in central Asia. Its name is derived from that of the hero of a famous Persian poet, Ferdowski. The first „Afrosiyob“ was presented to the public on 26 August 2011, with inauguration run taking just two hours between Tashkent and Samarkand and reaching 250 km/h. The reason for introduction of a new service is not coincidence, since Uzbekistan celebrates 20 years of indenpence.

At present the premiere service on this line is the „Registon“ (named after a famous square in Samarkand), which is result of an UTY initiative since 2004 to enhance quality of long distance trains. The rolling stock of „Registon“ consists of six modern 160 km/h air conditioned model 61-4170 carriages (see photo in R 3/11 on p. 20), and haulage is provided by O'ZBEKISTON locomotives. Another quality service of the several comfortable trains being offered is the „Sharq“ („East“), which level was enhanced in September 2006 and which links Tashkent with Bukhara. ***This train is shown in the right-hand photo, taken on 10 June 2009 near Bakhmal, haulage being provided by O'ZBEKISTON 0011.***

UTY